Model IL24

Extruded Aluminum Louver • 4” Deep • 45° Dual Drainable Baffle Blades • Stationary • Channel Type

STANDARD CONSTRUCTION

FRAME: Extruded aluminum, 6063-T52/T6 alloy. Available in .081” thickness (nominal) and .125” thickness (nominal).

BLADE: Extruded aluminum, 6063-T52/T6 alloy. Available in .081” thickness (nominal) and .125” thickness (nominal). Blades approximately 4” on centers.

LOUVER FACE: Full width sill, with head and blades contained within jambs.

SCREEN: (When indicated.)
½” flattened aluminum (.051” thick),
-or- ½” sq. mesh, intermediate double-crimped aluminum wire, .063” dia.,
-or- 18⁄16 mesh, .011” dia. aluminum wire, insect screen.

FINISH: Mill

OPTIONS

Finish - Baked Enamel, Kynar, Anodize

NOTES

1. ½” nominal deduction will be made to the opening size given.
2. Approximate shipping weight is 4.0 lbs./sq.ft.

LOUVER SIZES

Min Panel	Max Single Panel
12"W x 12"H	60”W x 96”H

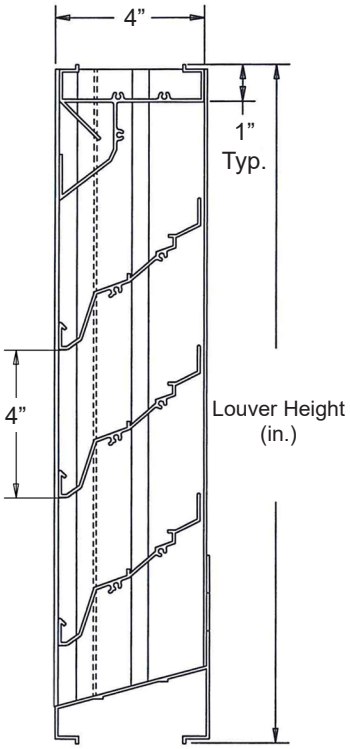

Not to scale.

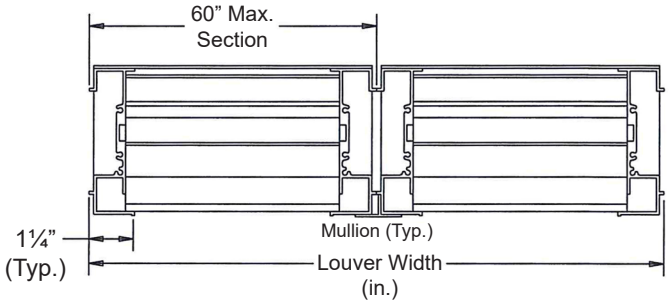

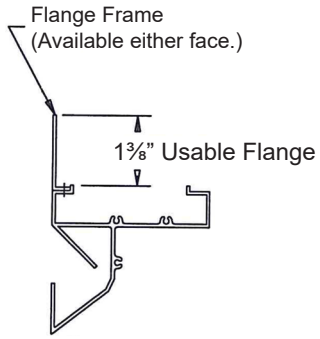

Flange Frame Option

Item #	**Qty**	Width	Height	Width	Height	**Mullion**	Type	Location		
		Opening Size		**Louver Size**			**Screens**			**Union Made**
Arch. / Eng. :						**EDR:**		**ECN:**		**Job:**
Contractor:										
Project:						**Date:**		**DWN:**		**DWG:**

In the interest of product development, Louvers & Dampers reserves the right to make changes without notice.

Louvers & Dampers
A Mestek Company

www.louvers-dampers.com

450 Riverside Drive • Wyalusing PA, 18853 • Phone 570-746-1888 • Fax 570-746-9286

PERFORMANCE DATA

Pressure Drop: .17 in. w.g. at 1100 fpm (Intake)
Free Area: 8.37 sq.ft. = 52% for 48”W x 48”H sample tested in accordance with AMCA Standard 500-L.
Beginning Point of Water Penetration: 942 fpm

Ratings do not include effects of a screen.

Pressure Drop

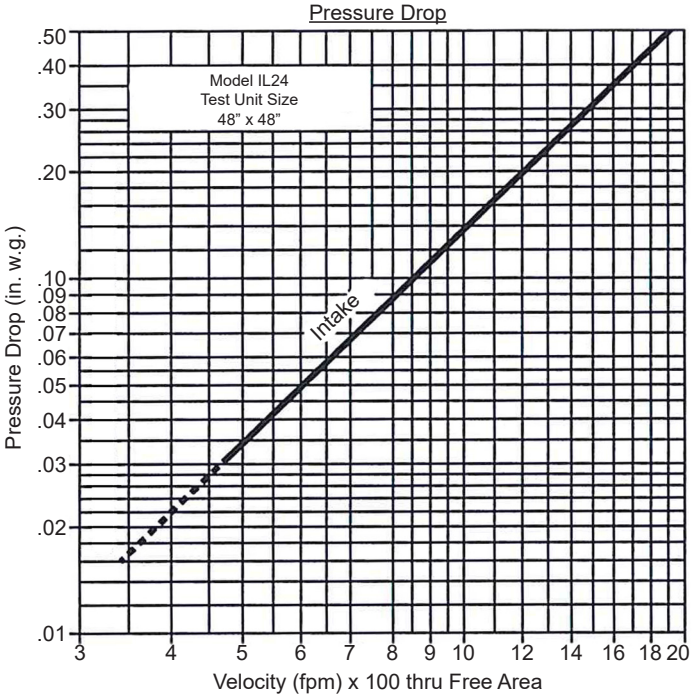

Intake air converted to standard air density.
Tested to AMCA Standard 500-L, Figure 5.5.

Water Penetration

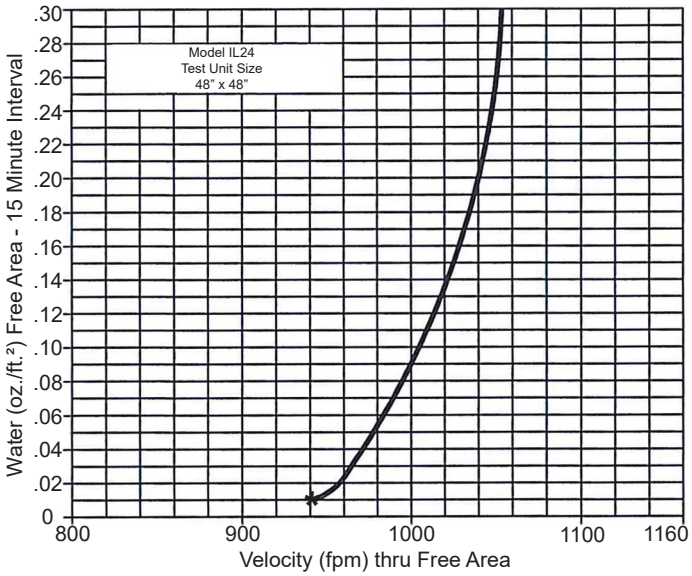

942 (FPM) Beginning Point of Water Penetration

Free Area (sq.ft.)

Height (in.)	Width (in.) 12"	18”	24”	30”	36”	42”	48”	54”	60”
12”	.31	.50	.70	.90	1.09	1.29	1.48	1.68	1.87
24”	.81	1.31	1.82	2.33	2.84	3.35	3.86	4.36	4.87
36”	1.30	2.12	2.94	3.77	4.59	5.41	6.23	7.05	7.87
48”	1.80	2.93	4.07	5.20	6.34	7.47	8.37	9.74	10.87
60”	2.29	3.74	5.19	6.64	8.08	9.53	10.98	12.43	13.88
72”	2.79	4.55	6.31	8.07	9.83	11.59	13.35	15.12	16.88
84”	3.28	5.36	7.43	9.51	11.58	13.65	15.73	17.80	19.88
96”	3.78	6.17	8.55	10.94	13.33	15.72	18.10	20.49	22.88

Louvers & Dampers certifies that the Model IL24 shown herein is licensed to bear the AMCA seal. The ratings shown are based on tests and procedures performed in accordance with AMCA Publication 511 and comply with the requirements of the AMCA Certified Ratings Program. The AMCA Certified Ratings Seal applies to Water Penetration and Air Performance Ratings only.